Evolution of the Particle Size and Number Concentration from Diesel Engine from Idle to High Load

C.C. Barrios[1], C. Martín[1] and A. Domínguez-Sáez[1]*

[1]Department of Environment, Research Center for Energy, Environment and Technology, CIEMAT, Madrid, 28040, Spain, carmen.barrios@ciemat.es

Abstract

Epidemiologic evidences suggest an association between exposure to fine and ultrafine particles and adverse health effects; in addition, it is known that an important contribution is attributed to diesel fuelled vehicles. Little is know, however, the relation between operating parameters affecting combustion and nanoparticle number and size distribution. The main aim of this work is to define a map of particle number emissions covered state conditions of the engine and relate it to the effect of variable as turbocompressor, EGR (Exhaust Gas Recirculation) and in general all the parameters that affect in any way to the combustion process. Effective control of these parameters can help to minimize nanoparticle emissions, ultrafine specially. A variation in the EGR 10% would allow a particle number concentration reduction of 55% for dp < 60 nm.

Introduction

It is clear that one of the pollutants from diesel engines currently of most interest to the scientific community (Vedal, 2007), because of its impact on community health are the particles, particularly nanoparticles that can reach the deeper lung sections (Schwela, 2000). In this article we want to evaluate how the distribution in size and number of nanoparticles emitted by a diesel engine of the latest generation evolves and how the management of emission reduction systems such as EGR and of power improvements as the turbocharger, more focused on the reduction of the emission of nanoparticles, but without compromising the reduction of the emission of gases, could be very important for the future development of diesel engines.

Currently, European legislation only provides limits for the emission of gases and particle number, however it is anticipated that in the near future will also legislate considering the size of the emitted particles and although it is clear the high effectiveness of aftertreatment systems as particulate filters (DPF) to reduce the mass of particulates emitted by the vehicles (Mohr et al., 2006). It is not so clear the effectiveness of these systems when referring to the number of particles below 25 nm due to the apperance of nanoparticle during the DPF regeneration process by pyrolysis of particulate matter deposited on the filter (Bergmann et al., 2009).

Considering the life of the DPF, depending on the engine operating condition in which the motor operates and hence depending on the number and size of particles emitted, it is evident that for the duration of the post system treatment is viable, it is necessary to set breakpoints, so that the particle size range which is retained, is relatively large. For this reason the cut size range of particles varies greatly depending on the manufacturer of the DPF. Under these circumstances, it is considered that any help, that from the combustion process contributes to reduce the number of nanoparticles that are produced, will be necessary, even if it means sacrificing very little emission of other pollutants such as NOx for a reduction in the number of particles emitted.

Material and Methods

The test bench used is a diesel engine and a dynamometer (SCHENK W150) controlled by a HORIBA's SPARC system. The diesel engine tested is a 2.0 TDI 140 hp Volkswagen Group, with turbocharging and direct injection injector system. The exhaust gases are catalyzed by an oxidation catalyst. The particle measurement was carried out using a EEPS 3090 (TSI Inc.) and a rotating disc diluter MD 19-2E (Eng Matter) with a first dilution in hot conditions (150º and 1:1695 dilution factor) and a second dilution in cold conditions (1:2 dilution factor) (Kasper, 2004; Barrios et al, 2011), the thermodynamic control of the sampling line prevents nucleation of volatile compounds. The concentration of pollutants in exhaust gases (CO, CO_2, NOx and THC) were measured using OBS 2200 (HORIBA Inc.). Furthermore, we recorder operating parameters of the engine, speed, torque, throttle position, intake air temperature, coolant

temperature, fuel temperature, mass flow of intake air, percentage exhaust gas recirculation, atmospheric pressure , turbo boost pressure and Fuel/Air ratio.

Measurements for obtaining a map of operation of the Electronic Control Unit (ECU)

To analyze a wide range of engine operation conditions, engine speed and engine torque were varied. The engine operating conditions were 1250, 1500, 1750, 2000, 2250 and 3000 rpm. The engine torque is varied until a stable condition of the engine in different percentages of the maximum load for each engine speed 0, 15, 25, 35, 50, 60 and 70%, resulting, therefore, a total of 42 different experimental conditions. All experiments were performed with the engine in hot running condition and long enough to ensure stability of the emission (two to ten minutes).

Measurements with variation of exhaust gas recirculation

To analyze the influence on the emission of particles and gaseous pollutants of the recirculated exhaust gas flow, a setup was made to control the EGR valve opening. The EGR valve is actuated by vacuum. The ECU controls the EGR opening according to the measured air mass flow, which allows adapting the injection depending on the mass air flow without limp mode. Figure 1 shows a basic diagram of the setup. Opening the EGR valve until the demanded position is achieved using the vacuum generated by the engine vacuum pump and is controlled by two manually adjustable valves (A and B). Figure 2 shows the 2.0 TDI engine in which we are developed the experiments and the real setup of the EGR control.

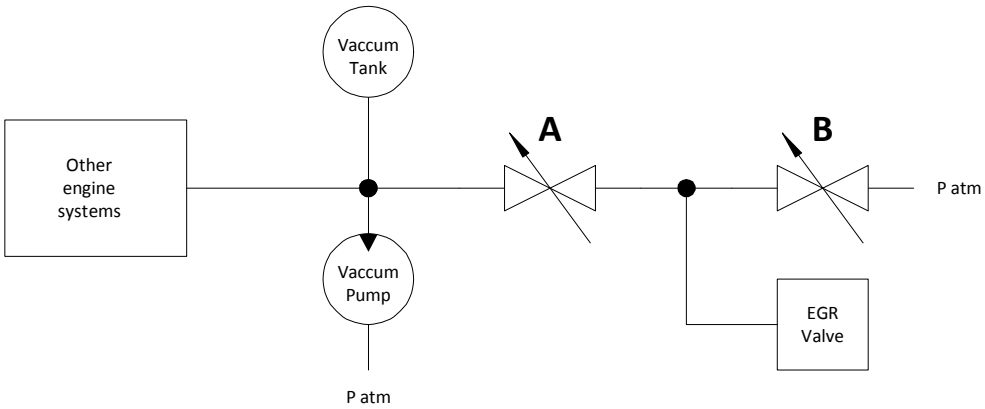

Figure 1: Configuration of the EGR control valve

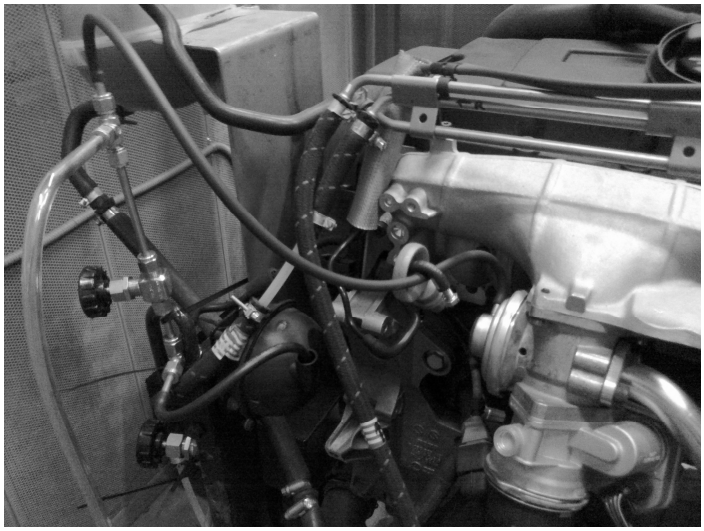

Figure 2: 2.0 TDI engine and real setup of the EGR control

Under normal operating conditions, the engine ECU decides the quantity of recirculated gases for each engine operating condition following the map programmed by the manufacturer. The control of EGR valve has allowed EGR variations without modifying the parameters of the ECU. We have measured the emission of total particle concentration and gaseous pollutants concentrations ranging from 0% EGR until the failure of combustion. For the condition of 1500 rpm and 35% maximum torque, the points tested were 0, 12, 28, 38, 43 and 50% EGR and 2100 rpm and 40% maximun torque, measurements were made at 0, 7, 12, 26 and 32 % EGR.

Results and Conclusions

In Figure 3 is shown a nanoparticle number-emission map for a TDI 2.0 last generation engine. The results found show that from 1800 rpm and more than 40-50% of maximum load, higher concentrations of nanoparticles emission are achieved (Figure 3), causing saturation of measuring equipment. At 1500 rpm and 35% of maximum load a local maximum in the nanoparticle emission is observed due to the existence of a maximum in the fuel/air ratio. In this operating condition the pressure provided by the turbo compressor is very low (15% of the maximum overpressure) because the exhaust gases do not have enough energy to move the turbine. The increased load (0 to 35%) is obtained by increasing the mass of fuel injected causing an increase in the ratio F/A. To increase the engine speed or load from this zone increases the energy of the exhaust gases allowing a increase of the turbo efficiency and therefore the air mass introduced to the cylinders increases, the required powers may be obtained with lower F/A and lower nanoparticle emissions.

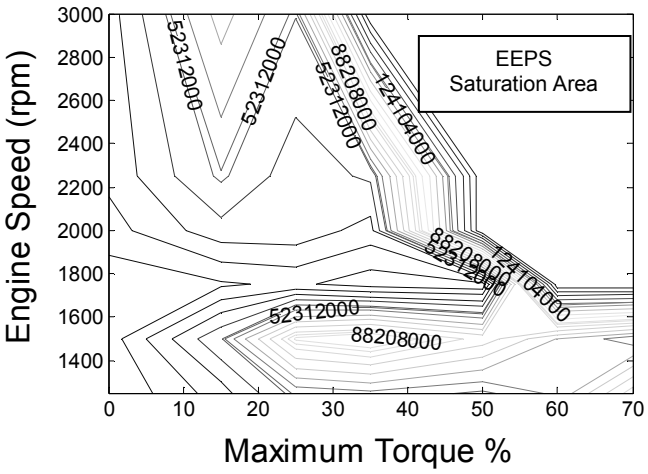

Figure 3: Calculated particle number concentration-emission map

Figure 4 shows the particle number and size distribution for different experimental conditions, showing that for low engine speeds (n < 1750 rpm) when the percentage of maximum load increases, the GMD (Geometric Mean Diameter) increases. For high engine speeds (n > 1750 rpm), the GMD has a maximum centered in 80 nm for 15% maximum engine load. In general, there is greater appearance of the accumulation phenomenon if n < 1750 rpm due to the longer residence time in the combustion chamber.

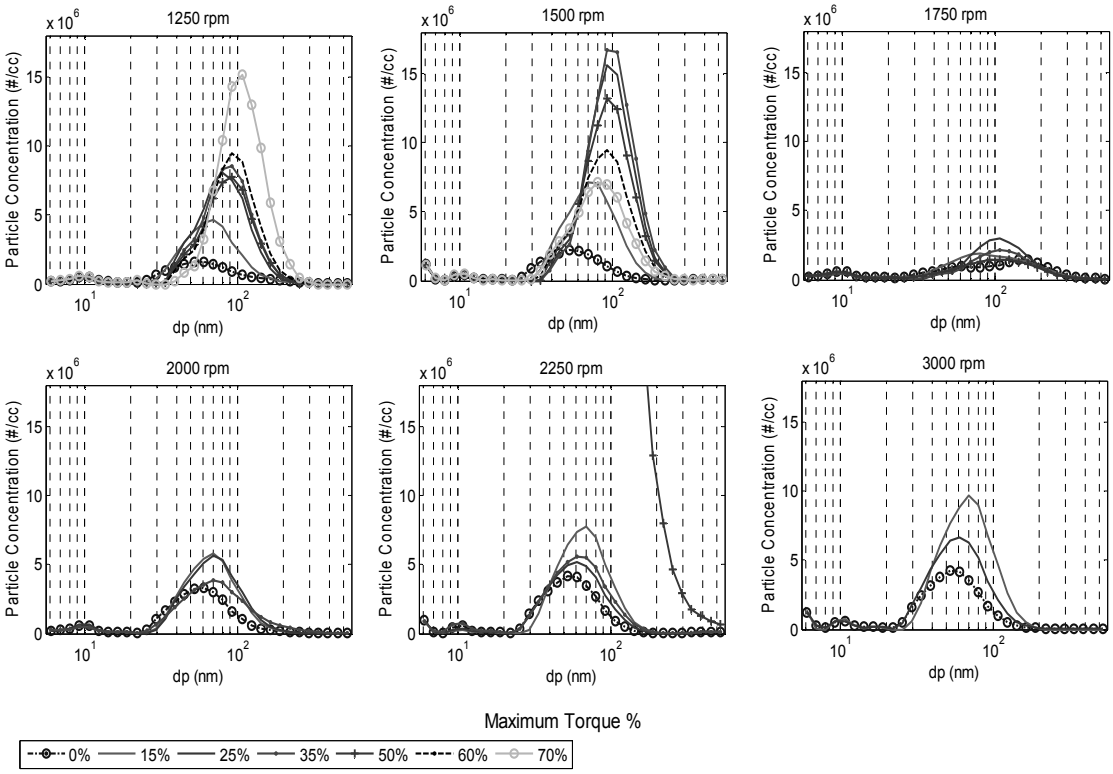

Figure 4: Particle size distribution in each experimental condition

The results show for 1500 rpm, 35% of the maximum torque and 38% EGR (327 mg/str), an emission peak of total number of particles of 1.3 E8 #/cc and 60.4 nm centered (see Figure 5-a). For this particular engine, a decrease in the percentage of recirculated exhaust gas to 28% (379 mg/str), represents a 55% reduction in total number of emitted particles with sizes below 60 nm, however represent only a 28% of the NOx emission. However, up to 43% EGR represents an increase in the number of particles emitted of 64%, with only a reduction in the NOx emission of 17%. This shows that a more thorough monitoring of the use of EGR considering their influence on the emission of small particles can be very helpful in reducing the number of small particles (dp < 60 nm) in modern diesel engines, even those equipped with systems type DPF aftertreatment.

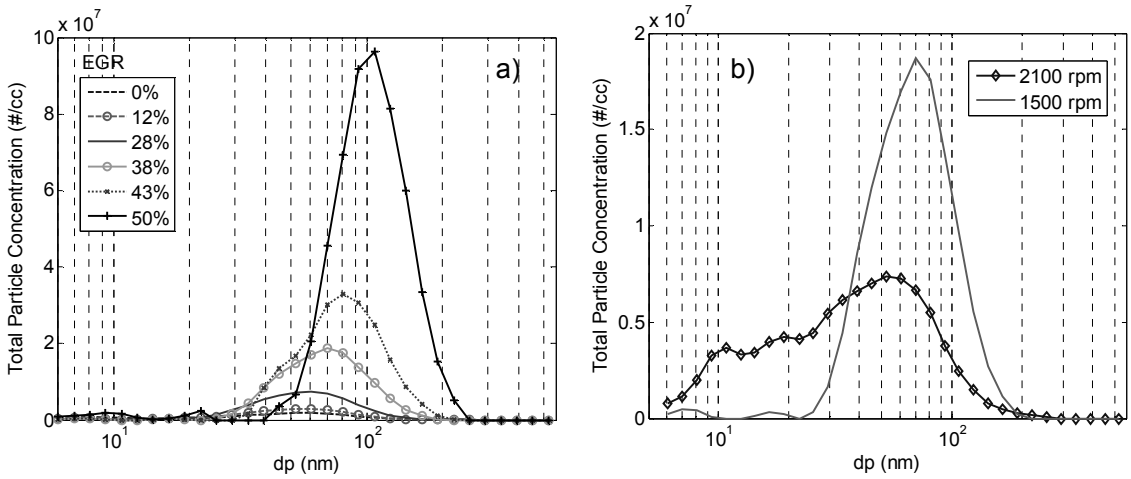

Figure 5: a) Particle size distribution for n=1500 and 35%of maximun torque with different percentages of exhaust gas recirculation. b) Particle size distribution for the same condition of F/A ratio and n=2100 and 1500 rpm.

Regarding the influence of the turbocharger, the results show that at 1500 rpm, the air intake is 379 mg/str and inlet pressure is 1144 mbar, while for 2100 rpm, air intake is 537 mg/str and inlet pressure is 1699 mbar, for the same condition of EGR percentage and F/A relation, this means that the increase in the actual engine output is due to increased air admission pressure and the temperature during the combustion process. In this case, the emission of gases and the total number of emitted particles is very similar, however the number of particles with diameters below 25 nm is significativaly higher. As engine speed increases, the combustion time for every cycle is short. This means when the agglomeration occur, there is less time to proceed to completion (Li et al., 2007), decreasing the GMD and increasing particle in nuclei mode (see Figure 5-b).

In summary, we can conclude that knowing the relationship between engine operating parameters and nanoparticles emitted makes possible the characterization of minimum emission allowing manufacturers to propose alternatives for reducing their emissions.

References

Barrios, C.C., Domínguez-Sáez, A., Rubio, J. R., Pujadas, M., (2011)Development and Evaluation of On-Board Measurement System for Nanoparticle Emissions from Diesel Engine, *Aerosol Sci. Technol*., 45(5), 570-580

Bergmann, M., Kirchner, U., Vogt, R., and Benter, T. (2009), On-Road and Laboratory Investigation of Low-Level PM Emissions of a Modern Diesel Particulate Filter Equipped Diesel Passenger Car, *Atmos. Environ*., 43:1908-1916.

Kasper, M. (2004), The Number Concentration of Non-Volatile Particles—-Design Study for an Instrument According to the PMP Recommendations, *SAE Paper.*, 2004-01-0960.

Mohr, M., Forss, A. M., Lehmann, U. (2006), Particle Emissions from Diesel Passenger Cars Equipped with a Particle Trap in Comparison with other Technologies*, Environ. Sci. Technol*., 40: 2375–2383.

Li, X., Huang, Z., Wang, J., Zhang, W. (2007), Particle size distribution from a GTL engine, Sci. Total *Environ.,* 382(2-3):295-303.

Schwela, D. (2000), Air Pollution and Health in Urban Areas, *Rev. Environ. Health*, 15:13-42.

Vedal, S. (1997*)*, Ambient particles and health: lines that divide, *J. Air Waste Manage. Assoc.,* 47, 551-581.