Particle and gaseous emissions from individual diesel and CNG buses

Å.M. Hallquist[1#], M. Jerksjö[1], H. Fallgren[1], J. Westerlund[2] and Å. Sjödin[1]*

[1] IVL Swedish Environmental Research Institute Ltd, Box 5302, 400 15, Gothenburg, Sweden
asa.hallquist@ivl.se

[2] Atmospheric science, Department of Chemistry and Molecular Biology, University of Gothenburg, 412 96, Gothenburg, Sweden

[#] Maiden name: Jonsson

Introduction

It is acknowledged that traffic-related emissions contribute significantly to total particulate air and gaseous pollutants in urban environments. Many epidemiological studies have shown that particles have adverse health effects (Pope and Dockery, 2006). Particles also affect climate either directly via scattering and absorption of radiation, or indirectly via its influence on the formation of clouds.

Experimental Method

In this study size-resolved particle and gaseous emissions from 28 individually diesel-fuelled and 7 compressed natural gas (CNG)-fuelled buses were characterised during real-world dilution scenarios (Hallquist et al., 2012). The method used relates particle emissions to CO_2 as a tracer of combustion, e.g. (Hak et al., 2009, Jonsson et al., 2011), and involves extractive sampling of a passing bus plume. The particles were characterised using an EEPS (Engine Exhaust Particle Sizer, model 3090, TSI Inc.) and the concentration of CO_2 was measured with a non-dispersive infrared gas analyser (LI-840, LI-COR Inc.). A thermodenuder (TD) was used in front of the EEPS in order to prevent influence of the ambient temperature on the measurements (298 K). The gaseous species, NO, CO and HC, were measured by using a remote sensing device (AccuScan RSD 3000, Environmental System Products Inc.) (Fig.1).

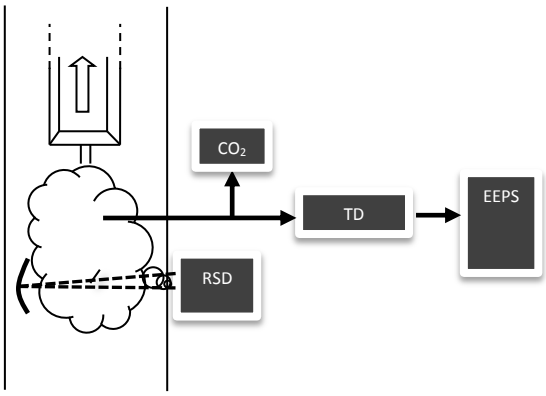

Figure 1. Schematic of the experimental set-up and instrumentation used (Hallquist et al., 2012).

Results and Discussion

Emission factors (EFs) were calculated by assuming the CO_2 concentration to be directly proportional to the fuel consumption, hence assuming complete combustion. In the calculations a carbon fraction of 0.865 and 0.749 for diesel and CNG fuel, respectively, was used. In this study the emission factors are presented as mass or number per kg fuel used.

The tested CNG buses emitted on average a higher number of particles compared to the diesel-fuelled buses. However, the particle mass emitted was on average lower compared to the diesel buses (Table 1).

Table 1: Average EF_{PN} and EF_{PM} for CNG buses and diesel buses with/without DPF

	EF_{PN} # (kg fuel)$^{-1}$ 10^{14}	**EF_{PN}** # (vehicle km)$^{-1}$ 10^{14}	**EF_{PM}** mg (kg fuel)$^{-1}$	**EF_{PM}** mg (vehicle km)$^{-1}$
Diesel with DPF	8.0±3.1	2.5±1.0	337±276	104±85
Diesel wo DPF	28±16	8.6±4.8	1011±585	313±181
CNG	78±57	40±29	24±18	12±9

Size-resolved EF_{PN} showed more or less unimodal size distributions. CNG buses emitted smaller particles compared to diesel buses, peak diameter 10 nm and 70-90 nm respectively which is similar to results reported in Jayaratne et al., 2009 (Fig. 2).

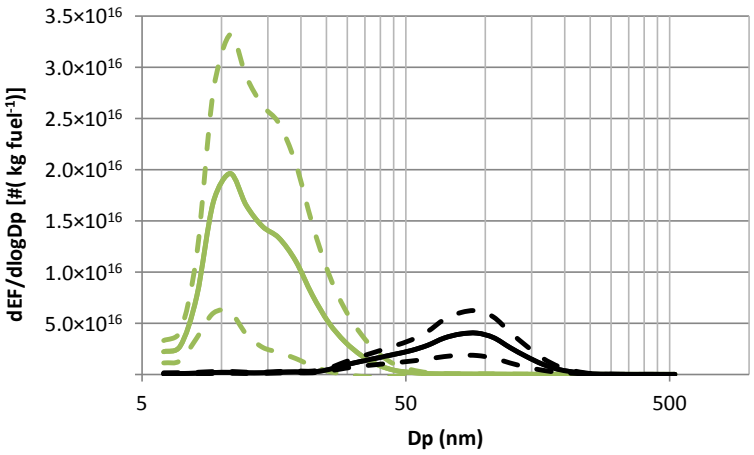

Figure 2. The average size-resolved EFs by number for CNG-fuelled buses (green line) and diesel-fuelled buses without DPF (black line). Dashed lines are the statistical 95% confidence interval (Hallquist et al., 2012).

Acknowledgement

This work was financed by Västtrafik, The Foundation for the Swedish Environmental Research Institute, SIVL and the Graduate School Environment and Health.

References

Hak, C. S., Hallquist, M., Ljungström, E., Svane, M., Pettersson, J. B. C. (2009) *J. Atmos. Environ*, 43, 2481-2488.

Hallquist, Å, M., Jerksjö, M., Fallgren, H. Westerlund, J. and Sjödin Å. (2012) *ACPD* 12, doi: 10.594/acpd-12-1-2012

Jayaratne, E. R., Ristovski, Z. D., and Morawska, L.: Particle and gaseous emissions from compressed natural gas and ultralow sulphur diesel-fuelled buses at four steady engine loads, *Science of the Total Enivronment*, 407, 2845-2852, 2009.

Jonsson, Å, M., Westerlund, J., Hallquist, M. (2011) *Geophys Res. Lett,* 38, L13809

Pope, C. A., and Dockery, D. W. (2006) *Journal of Air & Waste Management Association* 56, 709-742.